Q-WALL MAXI

Performance Lighting





Wall mount series. Fixtures consist of:

- Multi-step powder-coat painting process, optimized against UV rays and corrosion.
- Copper-free extruded aluminum housing and copper-free precision die-cast aluminum ring/faceplate, bracket (WALL versions) and mounting plate.
- Copper-free die-cast aluminum heat-sink passive cooling system.
- Extra-clear, tempered, silk-screened, flat glass diffuser.
- Custom molded, anti-aging gasket(s).
- Stainless steel external hardware.
- High-efficiency COB, combined with an optimized passive cooling system, provides a long LED life.
- Internal specular reflector coated with 5-layers of PVD 99.98% pure aluminum providing >95% reflection.
- Single (M) or dual (B) light emission.
- Circular Intensive beam angle (C/I).
- Circular Medium beam angle (C/M).
- Circular Wide beam angle (C/W).
- Input voltage: 120-277 V (50 / 60 Hz), integral 0-10 V dimming driver.
- DarkSky approved when ordered with single light emission only, and in 3000K or below.
- Optional, integral, emergency battery-pack designed for a minimum operation of 90 minutes (EMPK versions).
- Standard hinged bracket for ease of installation: wiring can be completed by mounting the bracket ahead of the luminaire, then sliding luminaire onto the bracket using quick connectors system, then securing the luminaire by tightening the stainless steel set screws (WALL versions only).
- Five optional finishes available. Add finish suffix to any part number for textured Black (BK-81), Iron gray (AN-96), Aluminum metallic (GR-94), White (WH-87), Iron rust (RB-10) when not standard.
- Consult factory for dimming options, marine-grade, custom finishes (please specify RAL color), and non-cataloged CCT (Kelvin) options including static colors.
- 5-year warranty.
- Marine Grade finish.
- Suitable for Natatorium applications.

IP 65 · WET · PRONTO · cULus LISTED · 0-10 V · 90° · RAL · IK 07 2 J

FINISHES

- **AN-96** / Iron gray / Textured
- **GR-94** / Aluminum metallic / Textured
- **WH-87** / White / Textured
- **BK-81** / Black / Textured
- **RB-10** / Iron rust / Textured

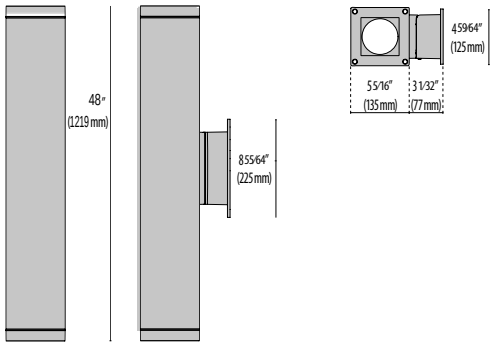

Q-WALL MAXI

Scan here for installation instructions

Performance in Lighting reserves the rights to make all necessary changes without prior notice.

Performance in Lighting - 2621 Keys Pointe - Conyers, Georgia 30013 - USA - voice 770.822.2115 - info.usa@pil.lighting
www.performanceinlighting.com

Rev. 09/07/2026

Order Guide - Q-WALL MAXI

Performance Lighting

Order code example **QWMAX-M-15W-3K-C/I-AM-UNV-010V-EMPK**

Series	Light Emission	Wattage	CCT	Distribution	Finish	Voltage	Dimming	Options/ Accessories
QWMAX Q-Wall Maxi	**M** Mono Directional (One-Way) **B** Bi-Directional (Two-Way)	**15W** 15 Watt (M) **25W** 25 Watt (M) **30W** 30 Watt (M max) **18W** 18 Watt (B) **40W** 40 Watt (B) **60W** 60 Watt (B max) **XX** Specify wattage must be below max	80 CRI std. **27K** 2700k **3K** 3000k **35K** 3500k **4K** 4000k **5K** 5000k **Red** Static Red **BLU** Static Blue **GRN** Static Green **AMBER** Amber 16W M Max 32 W B Max **RGBW** RGBW (Consult factory for control details)	**C/I** 20 degrees **C/M** 40° degrees **C/EW** 85° degrees **NB** Narrow Beam **FT** Forward throw film	**AM** Aluminum Metallic **IG** Iron Gray **IR** Iron Rust **BK** Textured Black **WH** Textured White **CC** Custom Color	**UNV** 120-277V	**010V** 0-10V Dimming Driver (standard) **ELV** 120V Line-Voltage Dimming Driver	**EMPK** Intergral emergency battery back up **OCC- 1** On/Off motion sensor **OCC- 2** Hi/LO motion sensor (Sensor uses 0-10V leads, 0-10 leads do not exit fixture) **P12** 12' square pole **P14** 14' square pole **PXX** Specify pole height

CONSULT FACTORY FOR OTHER AVAILABLE OPTIONS NOT SHOWN ABOVE

Performance in Lighting reserves the rights to make all necessary changes without prior notice.
Performance in Lighting - 2621 Keys Pointe - Conyers, Georgia 30013 - USA - voice 770.822.2115 - info.usa@pil.lighting
www.performanceinlighting.com

Rev. 09/07/2026

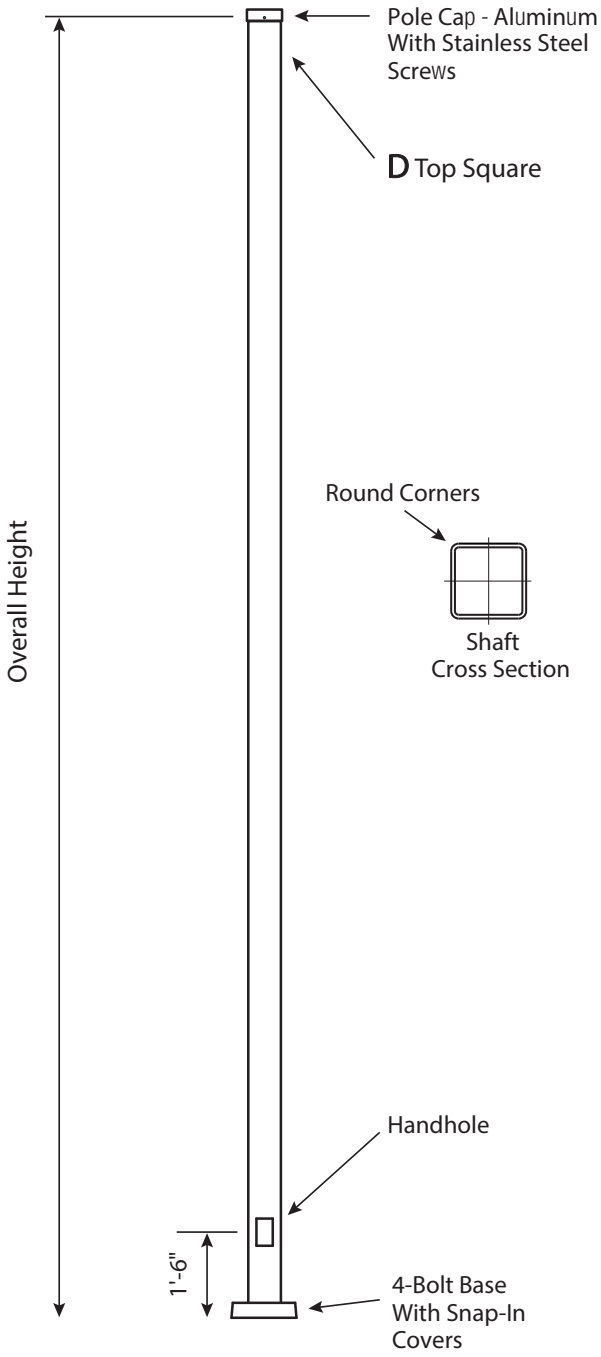

Performance in Lighting reserves the rights to make all necessary changes without prior notice.
Performance in Lighting - 2621 Keys Pointe - Conyers, Georgia 30013 - USA - voice 770.822.2115 - info.usa@pil.lighting
www.performanceinlighting.com

REMOTE RGBW CONTROL ACCESSORIES

RGBW CONTROL ACCESSORIES ARE TO BE INSTALLED IN REMOTE LOCATION
NON-INTEGRAL INSTALLATION

DESCRIPTION	FINISH PART NUMBER
Power Supply	
Kit driver 48V WP	**17347**
RF Controls	
RGBW RF controller 4 channel (0.35A each CH)	**3104173**
RGBW RF controller WP 4 channel (0.35A each CH)	**31041730**
RGBW hand held remote	**310429**
DMX Controls	
RGBW DMX enabler/decoder 4 channel (0.35A each CH)	**178973**
RGBW DMX enabler/decoder WP 4 channel 0.35A each CH)	**1789730**
Terminating resistor	**11015**
Terminating resistor WP	**110150**

RF Controls



17347



3104173



31041730



310429

DMX Controls



17347



178973



1789730



11015



110150

Lumen Output	27K	3K	35K	4K	5K
Q-WALL M 20° 15W	1395	1440	1485	1530	1575
Q-WALL M 20° 25W	2325	2400	2475	2550	2625
Q-WALL M 20° 30W	2786	2878	2969	3061	3152
Q-WALL M 40° 15W	1390	1425	1470	1515	1560
Q-WALL M 40° 25W	2300	2375	2450	2525	2600
Q-WALL M 40° 30W	2772	2863	2954	3045	3136
Q-WALL M 85° 15W	1410	1455	1500	1545	1590
Q-WALL M 85° 25W	2350	2425	2500	2575	2650
Q-WALL M 85° 30W	2805	2898	2991	3084	3177
Q-WALL B 20° 18W	1674	1728	1782	1836	1890
Q-WALL B 20° 40W	3720	3840	3960	4080	4200
Q-WALL B 20° 60W	5571	5755	5933	6122	6305
Q-WALL B 40° 18W	1647	1710	1773	1836	1899
Q-WALL B 40° 40W	3660	3800	3940	4080	4220
Q-WALL B 40° 60W	5572	5725	5907	6090	6272
Q-WALL B 85° 18W	1692	1746	1800	1854	1908
Q-WALL B 85° 40W	3760	3880	4000	4120	4240
Q-WALL B 85° 60W	5610	5725	5907	6090	6272

Performance in Lighting reserves the rights to make all necessary changes without prior notice.
Performance in Lighting - 2621 Keys Pointe - Conyers, Georgia 30013 - USA - voice 770.822.2115 - info.usa@pil.lighting
www.performanceinlighting.com